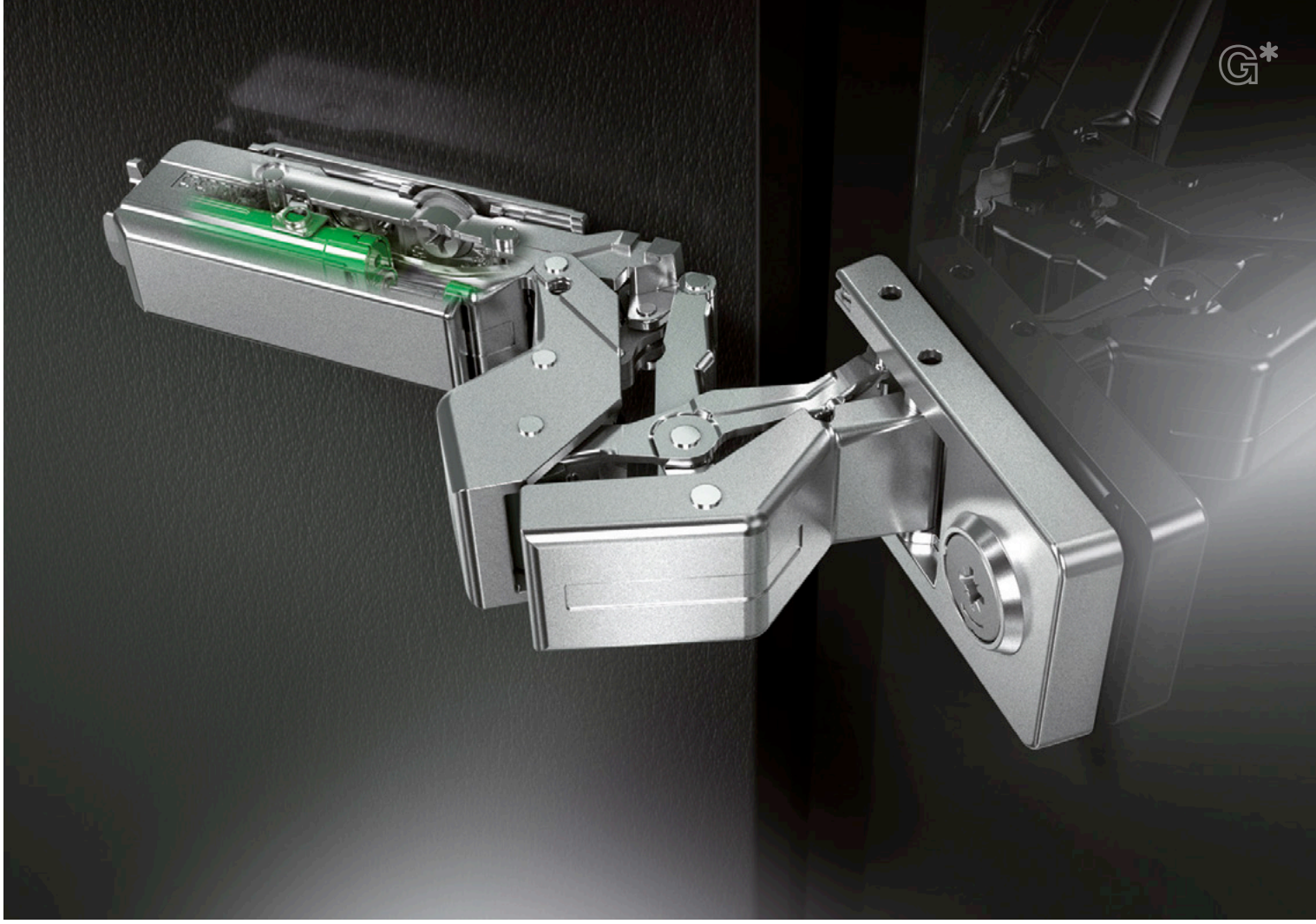

G*GRASS®

TIOMOS HINGE SYSTEM
FOR MIRROR, GLASS AND SLIM DOORS

The Tiomos Mirro glass and mirror door hinge and the Tiomos M9 and Tiomos M0 slim door hinge are the only hinges of their kind in the world to feature integrated damping technology.

Soft-close inside.
Maximum damping comfort for glass and mirror doors.

Three levels for individual comfort.
In addition to its many special functions, timeless design and unique character, Tiomos offers stepwise adjustment of the damping level. The action of the Soft-close damper can be easily adjusted to individual requirements – a turn of the lever is all that is needed.

For a stronger damping action, the adjustment lever is turned 90° to the right.

Tiomos hinges leave the factory with the adjustment lever in the horizontal position.

For a gentler closing action, the adjustment lever of the Soft-close damper is turned to the left by 90°.

On the glass door, Tiomos Mirro is fastened to a Zamak or stainless steel adapter using an eccentric screw. It is not necessary to drill the glass. This fastening technology ensures secure attachment and creates a light, floating look.

TIOMOS MIRRO FOR GLASS AND MIRROR DOORS

Glass lends rooms a feeling of clarity and transparency. Glass elements are also often used in furniture design, and in this respect Tiomos Mirro marks a new milestone. The Soft-close damping feature of the track-proven Tiomos hinge generation concealed in the hinge arm means that glass and mirror doors can now also be gently closed, ensuring maximum comfort for modern bathroom and living environments.

In addition to the clever fastening technology that ensures a firm and stable hold, Tiomos Mirro represents an elegant solution for high-quality mirror and glass doors, and can be attached using the self-adhesive adapters in the Nexis series.

Opening and closing become flowing movements that are hardly perceptible and that do justice to the fragile material.

Stability for thin materials.
Tiomos M9 unites all the benefits of the Tiomos hinge series for furniture doors from 12 mm.

reddot design award
honourable mention 2010

The quality of a hinge system is decisive for a long, trouble-free service life. In tests for durability and dropping under load, the entire Tiomos range achieves exceptionally positive values. In addition, the unique kinematics of the Tiomos hinge system as well as the 3-level damper adjustment won the Red Dot Award.

Consistent aesthetic design is only possible if different door applications can be moved with one single hinge system.

TIOMOS M9 HINGE SYSTEM

The versatile all-rounder for discerning door applications.

Designed especially for very slim furniture doors and a four-sided mitred application, Tiomos M9 has an extremely shallow cup depth. While each individual application for the GRASS innovation may be special, the unique Tiomos comfort is incorporated in every case. In addition to the three-dimensional adjustment and the stepless height adjustment, this also includes the outstanding kinematics that make furniture doors open smoothly and extremely easily. Interior designers around the world are inspired by the perfect alignment with minimum gap dimensions.

Maximum stability for thin furniture doors from 12 mm.

In contemporary furniture-making the trend is moving towards more slim-line surfaces and furniture doors. With Tiomos M9 it is not necessary to do without optimum opening and closing comfort. Even with a front thickness of only 12 millimetres, the unique hinge system remains durable, firm and stable in all positions. The perfected movements underline the trend towards uncompromising furniture design.

Rebated doors with graduated Soft-close damper adjustment.

There are furniture doors to suit all tastes, and it is very practical if one hinge can be used for a wide range of solutions. Tiomos M9 is also the world's only slim door hinge to feature fully integrated, damping technology for tool-free adjustment. This enables the use of hinges of the same design with or without a damping function in high-quality furniture construction.

High-tech functionality for doors with four-sided mitre application.

The complex inner workings of this hinge with its 56 components and physically optimised kinematics enable extremely smooth and easy opening of furniture doors up to an opening angle of 110 degrees. These optimised movement sequences enable mitred application on all four sides as well as reducing material wear.

New material freedom.
Tiomos M0 offers firm attachment to thin materials.

Full scope of design freedom thanks to a clever connection.

Thanks to the simple screw connection between Tiomos M0 and furniture doors it is possible to use materials with a thickness of between 6 and 10 mm without the need for cup holes.

Tiomos M0 is not only easy to assemble, it also impresses with integrated damping technology. As a result, Tiomos M0 allows the use of thin materials such as aluminium, and underlines the aspiration of the Tiomos range to cover all applications.

125° opening angle and zero door protrusion with Tiomos M0 enable comfortable handling of shelves and inset drawers inside the cabinet.

TIOMOS M0 FOR EXTREMELY THIN DOORS

Creating innovations means treading new paths. That applies just as much when designing new furniture as it does when developing new movement systems. Out-of-the-ordinary ideas make intelligent features and functions all the more important.

GRASS regularly enhances its hinge range to accommodate even the most unusual requirements and to open up completely new perspectives for furniture designers without compromising on comfort and maximum stability.

Whether it's stone slabs, aluminium, mineral composite or compact laminate – let Tiomos M0 inspire you to develop new ideas.

TIOMOS MIRRO

125° mirror hinge

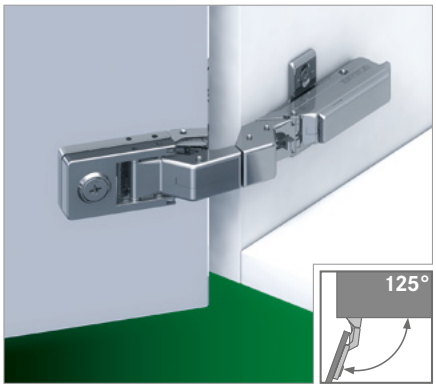

- 125° opening angle
- with integrated damper
- Fastening through door-side gluing of a stainless steel adapter
- Connection of the hinge to the adapter using a cam
- Quick final assembly without glass drilling
- 3-dimensional adjustment with appropriate mounting plate
- High overlay up to 19 mm

Available in 3 versions:

- With integrated damper (3 adjustable damping levels)
- Without integrated damper
- Without self-closing mechanism (without spring)

ORDER INFORMATION

Door overlay	Cranking	Damper		without spring	Item No.		
		with	without		Click-on For screw fixing		
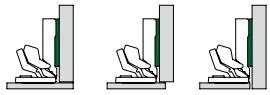	14	■	-	-	**F029**140**325**		
		-	■	-	**F047**140**326**		
		-	■	■	**F049**140**327**		

Cup material: Zamak, nickel-plated/arm material: Zamak, nickel-plated

COVER CAPS

	Designation	Imprinted/Embossed	Item No.
	Hinge arm cover cap, steel, nickel-plated, not imprinted	On request	**F072**135**500**
	Hinge arm cover cap, right, steel, nickel-plated, GRASS imprint	GRASS logo	**F072**135**550**
	Hinge arm cover cap, left, steel, nickel-plated, GRASS imprint		**F072**135**551**
	Premium hinge arm cover cap with integrated clip protection, plastic, black, not imprinted	On request	**F072**140**504**

ACCESSORIES

	Designation	Item No.
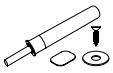	Tipmatic pin for wooden and aluminium frame doors	**F069**135**396**
	90° opening angle reduction clip	**F072**135**871**
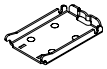	Stainless steel adapter Tiomos Mirro for mirrors	**F069**073**731**

	Designation	Item No.
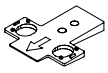	+5° wedge	**F072**135**757**
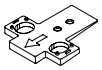	-5° wedge	**F072**135**758**

Packaging units are not covered in this brochure; please enquire with your supplier

INSTALLATION INFORMATION

All dimensions in millimetres

Overlay	Half overlay	Inset
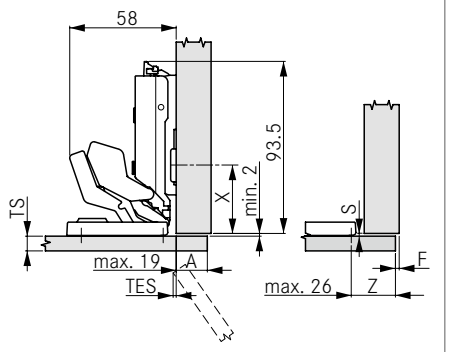	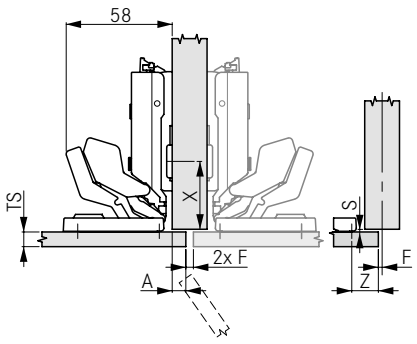	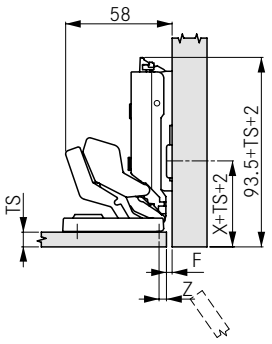
Mounting plate height 0	Mounting plate height 0	Mounting plate height 0

MINIMUM GAP/MINIMUM REVEAL

values for 0 mounting plate height

Gluing dimension (Z)	4		5		13		15		17		19		21		22		24		26	
Door protrusion (TES)	0		0		0		0		0		0		0		0.5		1.5		3	
Door overlay (A)	-3		-2		6		8		10		12		14		15		17		19	
min. reveal (F)/gap (S)	F	S	F	S	F	S	F	S	F	S	F	S	F	S	F	S	F	S	F	S
Door thickness 3-8 (TS)	2	2	2	2	2	2	2	2	2	2	2	2	2	2	2	2	2	2	2	2

ECO CROSS-MOUNTING PLATE

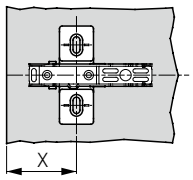

Hole spacing	Mounting plate height 0					
28	37					
37	46					
	Mounting plate position (X)					

STAINLESS STEEL ADAPTER

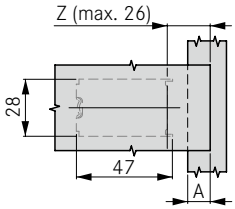

	Mounting plate height 0					
Z	A+7					
A	max. 19					
	Gluing dimension (Z)					

NUMBER OF HINGES

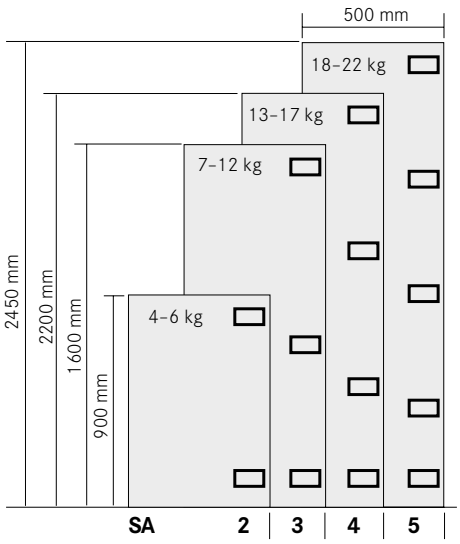

NOTES

Insetting of the door is achieved via a modified mounting plate attachment spacing (X) and a small gluing gap (Z).

ⓘ **Attention:** With mirror or glass doors, all reveals must be at least 1.5 mm (otherwise there is a risk of breakage).

The inner door edge must not touch the rack upon opening.

ⓘ **Installation advice:** Please contact your glass or door supplier In respect of glue selection and how to use the glue for fastening of the hinge retainer on mirror or glass doors.

ⓘ **Liability claims:** GRASS cannot accept any liability either for the glue used or the gluing process nor can it accept any responsibility for claims arising therefrom; we kindly ask for your understanding in this respect.

ⓘ **Attention:** Mirro hinges must not be used with cam mounting plates.

Attention: The hinge must not be glued directly to the back of the mirror. To preserve the integrity of the silver,use two back to back mirror.

TIOMOS MIRRO

125° mirror/clear glass hinge

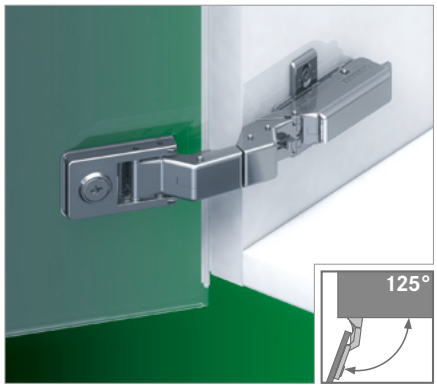

- 125° opening angle
- with integrated damper
- Fastening through door-side gluing of a Zamak adapter
- Connection of the hinge to the adapter using a cam
- Quick final assembly without glass drilling
- 3-dimensional adjustment with appropriate mounting plate
- High overlay up to 19 mm

Available in 3 versions:

- With integrated damper (3 adjustable damping levels)
- Without integrated damper
- Without self-closing mechanism (without spring)

ORDER INFORMATION

Door overlay	Cranking	Damper		without spring	Item No.		
		with	without		Click-on For screw fixing		
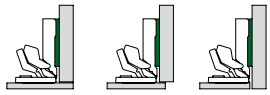	14	■	-	-	**F029**140**325**		
		-	■	-	**F047**140**326**		
		-	■	■	**F049**140**327**		

Cup material: Zamak, nickel-plated/arm material: Zamak, nickel-plated

COVER CAPS

	Designation	Imprinted/Embossed	Item No.
	Hinge arm cover cap, steel, nickel-plated, not imprinted	On request	**F072**135**500**
	Hinge arm cover cap, right, steel, nickel-plated, GRASS imprint	GRASS logo	**F072**135**550**
	Hinge arm cover cap, left, steel, nickel-plated, GRASS imprint		**F072**135**551**
	Premium hinge arm cover cap with integrated clip protection, plastic, black, not imprinted	On request	**F072**140**504**

ACCESSORIES

	Designation	Item No.
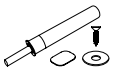	Tipmatic pin for wooden and aluminium frame doors	**F069**135**396**
	90° opening angle reduction clip	**F072**135**871**
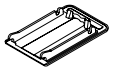	Zamak adapter, Tiomos Mirro for mirrors and clear glass	**F072**135**868**

	Designation	Item No.
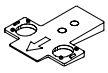	+5° wedge	**F072**135**757**
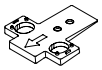	-5° wedge	**F072**135**758**

Packaging units are not covered in this brochure; please enquire with your supplier

INSTALLATION INFORMATION

All dimensions in millimetres

Overlay	Half overlay	Inset
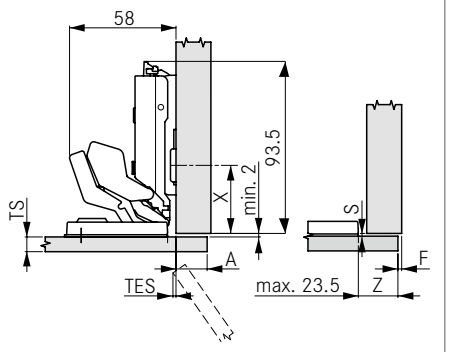	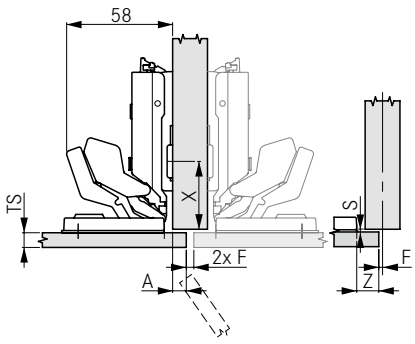	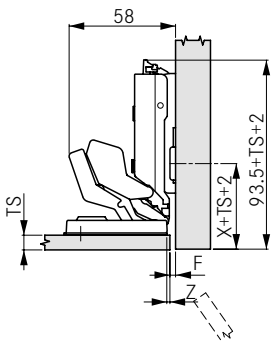
Mounting plate height 0	Mounting plate height 0	Mounting plate height 0

MINIMUM GAP/MINIMUM REVEAL

values for 0 mounting plate height

Gluing dimension (Z)	1.5		2.5		10.5		12.5		14.5		16.5		18.5		19.5		21.5		23.5	
Door protrusion (TES)	0		0		0		0		0		0		0		0.5		1.5		3	
Door overlay (A)	-3		-2		6		8		10		12		14		15		17		19	
min. reveal (F)/gap (S)	F	S	F	S	F	S	F	S	F	S	F	S	F	S	F	S	F	S	F	S
Door thickness 3-8 (TS)	2	2	2	2	2	2	2	2	2	2	2	2	2	2	2	2	2	2	2	2

ECO CROSS-MOUNTING PLATE

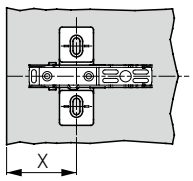

Hole spacing	Mounting plate height 0
28	37
37	46
	Mounting plate position (X)

ZAMAK ADAPTER

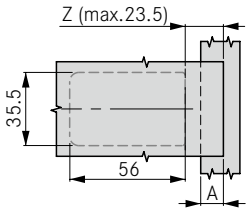

	Mounting plate height 0
Z	A+4.5
A	max. 19
	Gluing dimension (Z)

NUMBER OF HINGES

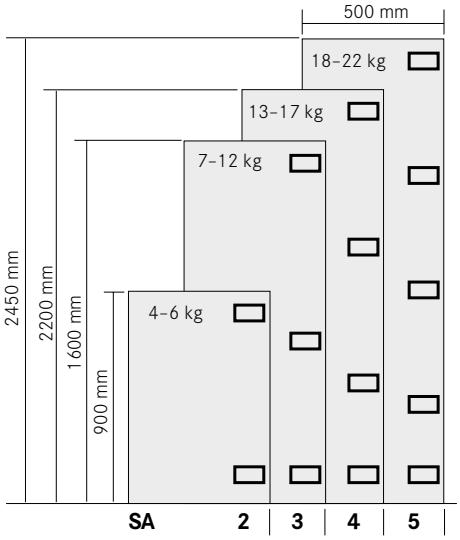

NOTES

Insetting of the door is achieved via a modified mounting plate attachment spacing (X) and a small gluing gap (Z).

ⓘ **Attention:** With mirror or glass doors, all reveals must be at least 1.5 mm (otherwise there is a risk of breakage).

The inner door edge must not touch the rack upon opening.

ⓘ **Installation advice:** Please contact your glass or door supplier In respect of glue selection and how to use the glue for fastening of the hinge retainer on mirror or glass doors.

ⓘ **Liability claims:** GRASS cannot accept any liability either for the glue used or the gluing process nor can it accept any responsibility for claims arising therefrom; we kindly ask for your understanding in this respect.

ⓘ **Attention:** Mirro hinges must not be used with cam mounting plates.

Attention: The hinge must not be glued directly to the back of the mirror. To preserve the integrity of the silver, use two back to back mirror.

TIOMOS MIRRO

125° mirror/clear glass hinge

INSTALLATION INFORMATION

All dimensions in millimetres

Angle applications

+5° WEDGE surface-mounted

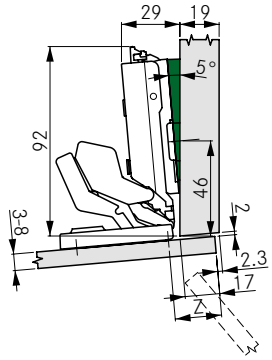

Adapter	Z	
Stainless steel	22.5	min. 20
Zamak	20	
	Height	Item No.
ECO cross-mounting plate	0	**F058**139**721**
+5° wedge	3	**F072**135**757**

+5° WEDGE inset

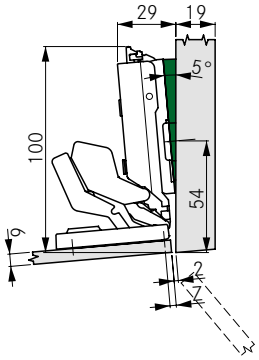

Adapter	Z	
Stainless steel	3	min. 20
Zamak	0.5	
	Height	Item No.
ECO cross-mounting plate	0	**F058**139**721**
+5° wedge	3	**F072**135**757**

+10° WEDGE surface-mounted

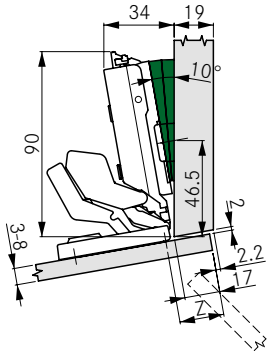

Adapter	Z	
Stainless steel	21.5	min. 25
Zamak	19	
	Height	Item No.
ECO cross-mounting plate	0	**F058**139**721**
+5° wedge (2x)	3	**F072**135**757**

Angle applications

+10° WEDGE inset

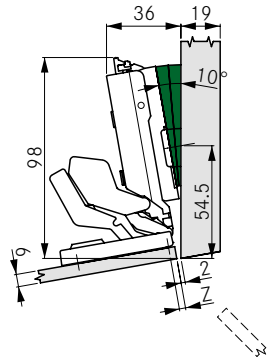

Adapter	Z	
Stainless steel	3	min. 25
Zamak	0.5	
	Height	Item No.
ECO cross-mounting plate	0	**F058**139**721**
+5° wedge (2x)	3	**F072**135**757**

+15° WEDGE surface-mounted

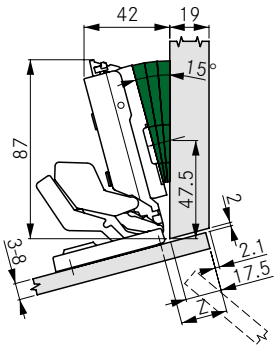

Adapter	Z	
Stainless steel	22.5	min. 30
Zamak	20	
	Height	Item No.
ECO cross-mounting plate	2	**F058**139**722**
+5° wedge (3x)	3	**F072**135**757**

+15° WEDGE inset

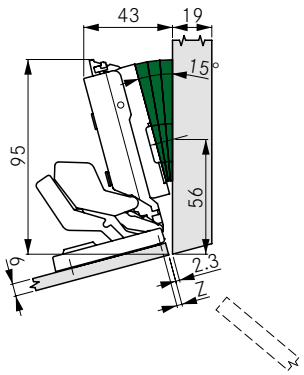

Adapter	Z	
Stainless steel	2.5	min. 30
Zamak	0	
	Height	Item No.
ECO cross-mounting plate	3.5	**F058**139**724**
+5° wedge (3x)	3	**F072**135**757**

Packaging units are not covered in this brochure; please enquire with your supplier

INSTALLATION INFORMATION

All dimensions in millimetres

Angle applications

-5° WEDGE surface-mounted

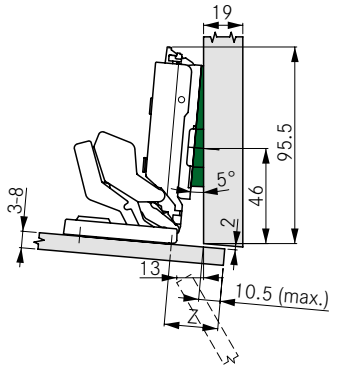

Adapter	Z	
Stainless steel	22.5	min. 20
Zamak	20	
	Height	Item No.
ECO cross-mounting plate	0	**F058**139**721**
-5° wedge	3	**F072**135**758**

-5° WEDGE inset

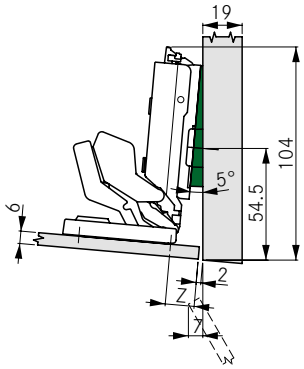

Adapter	Z	
Stainless steel	14	min. 20
Zamak	11.5	
	Height	Item No.
ECO cross-mounting plate	0	**F058**139**721**
-5° wedge	3	**F072**135**758**

-10° WEDGE inset

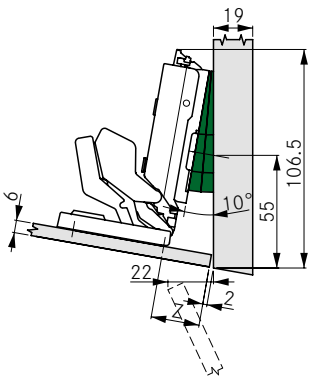

Adapter	Z	
Stainless steel	23.5	min. 25
Zamak	21	
	Height	Item No.
ECO cross-mounting plate	0	**F058**139**721**
-5° wedge (2x)	3	**F072**135**758**

NOTE

Trial fitting is recommended
for all door thicknesses.

LEGEND

Z	Gluing position

TIOMOS M9

110° hinge (door thicknesses from 12 mm)

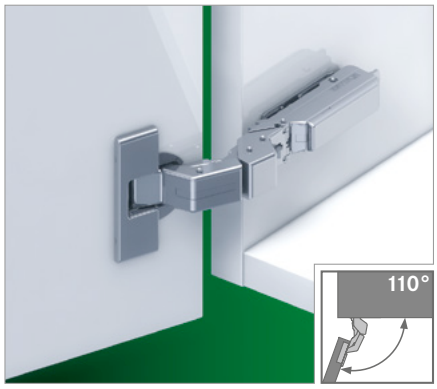

- For door thicknesses up to max. 28 mm
- 35 mm full cup drilled hole
- Low cup depth of 9 mm
- 3-dimensional adjustment with appropriate mounting plate
- For door overlays up to 25 mm

Available in 3 versions:

- With integrated damper (3 adjustable damping levels)
- Without integrated damper
- Without self-closing mechanism (without spring)

ORDER INFORMATION FOR DRILLING TEMPLATE 45/9.5

Door overlay	Cranking	Damper		without spring	Item No.		
		with	without		Click-on For screw fixing		
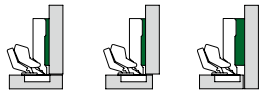	14	■	-	-	**F029**140**338**		
		-	■	-	**F047**140**339**		
		-	■	■	**F049**140**340**		

Cup material: Zamak, nickel-plated/arm material: Zamak, nickel-plated

COVER CAPS

	Designation	Imprinted/Embossed	Item No.
	Hinge arm cover cap, steel, nickel-plated, not imprinted	On request	**F072**135**500**
	Hinge arm cover cap, right, steel, nickel-plated, GRASS imprint	GRASS logo	**F072**135**550**
	Hinge arm cover cap, left, steel, nickel-plated, GRASS imprint		**F072**135**551**
	Premium hinge arm cover cap with integrated clip protection, plastic, black, not imprinted	On request	**F072**140**504**
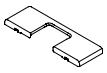	Hinge cup cover cap, steel, nickel-plated, not imprinted	–	**F072**135**503**

ACCESSORIES

	Designation	Item No.
	Countersunk wood screw Ø 3.5 x 15 mm	**F146**073**976**
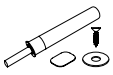	Tipmatic pin for wooden and aluminium frame doors	**F069**135**396**

	Designation	Item No.
	90° opening angle reduction clip	**F072**135**871**

Packaging units are not covered in this brochure; please enquire with your supplier

INSTALLATION INFORMATION

All dimensions in millimetres

Overlay	Half overlay	Inset
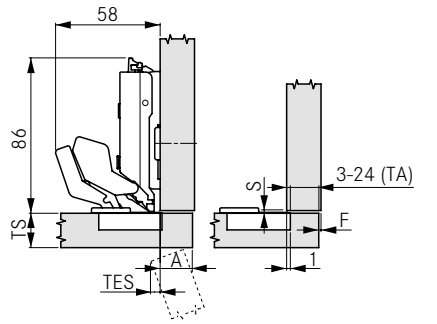	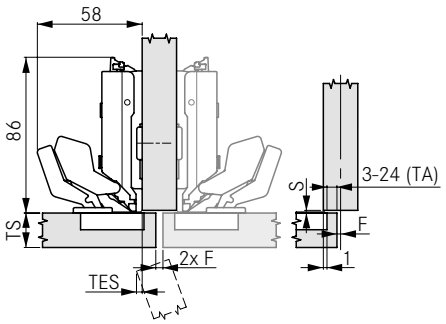	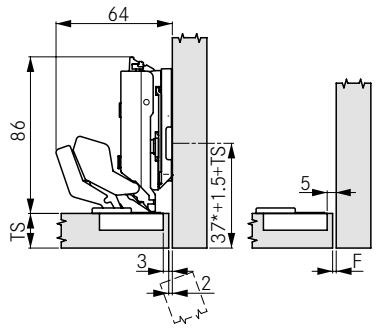
Mounting plate height 0	Mounting plate height 0	Mounting plate height 6 * Dimension for mounting plate for 37 mm hole spacing

MINIMUM GAP/MINIMUM REVEAL

values for 0 mounting plate height

Door thickness (TS)	Cup distance (TA)	3		4		5		6		7		8		9		10		11		12		13	
	Door protrusion (TES)	0.8		1.1		1.5		1.8		2.2		2.5		2.9		3.2		3.5		3.9		4.2	
	Door overlay (A)	4		5		6		7		8		9		10		11		12		13		14	
	min. reveal (F)/gap (S)	F	S	F	S	F	S	F	S	F	S	F	S	F	S	F	S	F	S	F	S	F	S
12-20		1	1.5	1	1.5	1	1.5	1	1.5	1	1.5	1	1.5	1	1.5	1	1.5	1	1.5	1	1.5	1	1.5
22		1	1.5	1	1.5	1	1.5	1	1.5	1	1.5	1	1.5	1	1.5	1	1.5	1.5	1.5	1.7	1.5	4	1.5
24		1	1.5	1.2	1.5	1.3	1.5	1.5	1.5	1.7	1.5	2	1.5	2.4	1.3	3.3	1.5	8.3	1.5	7.7	1.5	6.9	1.5
26		2.2	1.5	2.4	1.5	2.7	1.5	3.1	1.5	3.6	1.5	4.7[1]	1.5	12[1]	1.5	11.8	1.5	10.9	1.5	9.9	1.5	8.9	1.5
28		3.9	1.5	4.3	1.5	5.1[1]	1.5	6.3[1]	1.5	16[1]	1.5	16[1]	1.5	15[1]	1.5	14[1]	1.5	13[1]	1.5	12[1]	1.5	11[1]	1.5

Door thickness (TS)	Cup distance (TA)	14		15		16		17		18		19		20		21		22		23		24	
	Door protrusion (TES)	4.6		4.9		5.3		5.6		5.9		6.3		6.6		7		7.3		7.6		8	
	Door overlay (A)	15		16		17		18		19		20		21		22		23		24		25	
	min. reveal (F)/gap (S)	F	S	F	S	F	S	F	S	F	S	F	S	F	S	F	S	F	S	F	S	F	S
12-20		1	1.5	1	1.5	1	1.5	1	1.5	1	1.5	1	1.5	1	1.5	1	1.5	1	2	1	2	1	2
22		4	1.5	3.5	1.5	3	1.5	2.2	1.5	1.7	1.5	1.3	1.5	1	1.5	1	1.5	1	2	1	2	1	2
24		6	1.5	5.2	1.5	4.5	1.5	4	1.5	3.3	1.5	3	1.5	2.5	1.5	2.1	1.5	1.9	2	1.6	2	1.5	2
26		8	1.5	7.2	1.5	6.4	1.5	5.8	1.5	5.1	1.5	4.6	1.5	4.1	1.5	3.7	1.5	3.3	2	3	2	2.6	2
28		10[1]	1.5	9.2	1.5	8.4	1.5	7.6	1.5	6.9	1.5	6.4	1.5	5.8	1.5	5.3	1.5	4.9	2	4.5	2	4.2	2

[1] Value achievable by use of a 90° opening angle reduction clip

NOTE

Minimum reveal for doors with chamfered edges (R = 1 mm) set at factory setting.

Trial fitting is recommended for all door thicknesses.

DRILLING TEMPLATE 45/9.5

For screw fixing

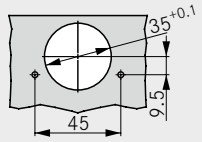

CUP DIMENSIONS

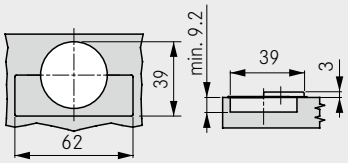

TIOMOS M9

110° hinge (door thicknesses from 12 mm)

ORDER INFORMATION FOR DRILLING TEMPLATE 48/9

Door overlay	Cranking	Damper		without spring	Item No.		
		with	without		Click-on For screw fixing		
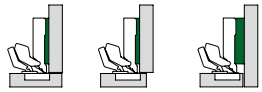	14	■	-	-	**F029**140**334**		
		-	■	-	**F047**140**335**		
		-	■	■	**F049**140**336**		

Cup material: Zamak, nickel-plated/arm material: Zamak, nickel-plated

DRILLING TEMPLATE 48/9

For screw fixing

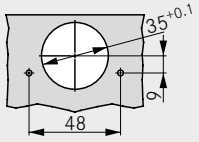

CUP DIMENSIONS

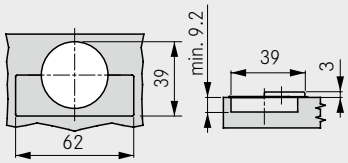

ORDER INFORMATION FOR DRILLING TEMPLATE 48/6

Door overlay	Cranking	Damper		without spring	Item No.		
		with	without		Click-on For screw fixing		
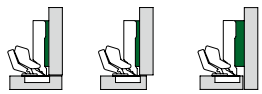	14	■	-	-	**F029**140**341**		
		-	■	-	**F047**140**342**		
		-	■	■	**F049**140**343**		

Cup material: Zamak, nickel-plated/arm material: Zamak, nickel-plated

DRILLING TEMPLATE 48/6

For screw fixing

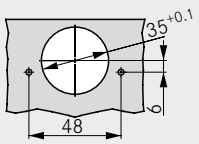

CUP DIMENSIONS

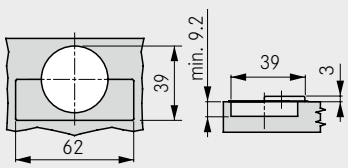

Packaging units are not covered in this brochure; please enquire with your supplier

TIOMOS M9

110° hinge (door thicknesses from 12 mm)

INSTALLATION INFORMATION

All dimensions in millimetres

Mitred application – circumferential and lateral

12 - 24 mm

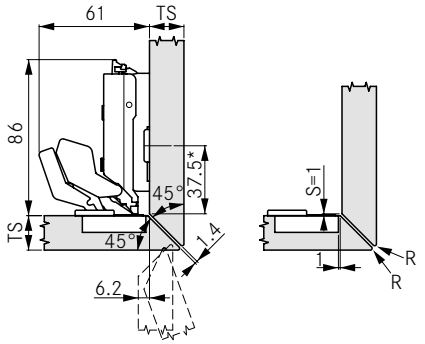

Mounting plate height 3

* Dimension for mounting plate for 37 mm hole spacing

Door thickness (TS)	Mitred application circumferential	Mitred application lateral
	R (min.)	R (min.)
12-17	0	0
18	0.2	0
19	1	0.4
20	1.5	1
21	2.2	1.8
22	3	2.5
24	4.3	4.1

Max. overlay

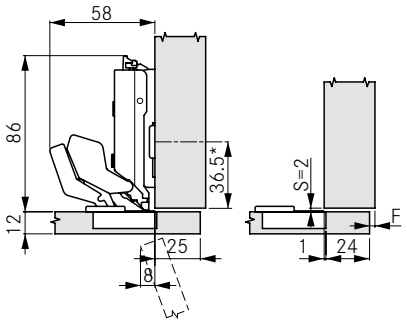

Mounting plate height 0

* Dimension for mounting plate for 37 mm hole spacing

NOTE

With circumferential mitred application all sides 1.4 mm reveal.

INSTALLATION INFORMATION

All dimensions in millimetres

Rebated applications

10 mm

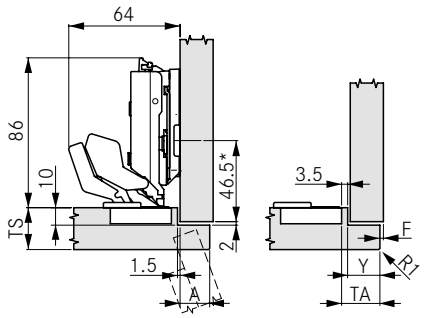

Mounting plate height 6
* Dimension for mounting plate for 37 mm hole spacing

Rack location	TS (max.)	A (max.)	Y (max.)	TA (max.)	F (min.)
	20	17	18.5	22	1
	28	17	18.5	22	See reveal table
	38	17	18.5	22	

13 mm

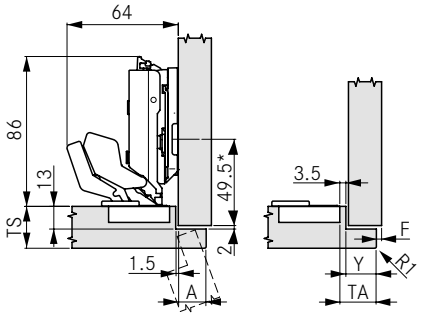

Mounting plate height 6
* Dimension for mounting plate for 37 mm hole spacing

Rack location	TS (max.)	A (max.)	Y (max.)	TA (max.)	F (min.)
	20	16	17.5	21	1
	28	16	17.5	21	See reveal table
	35	14	15.5	19	

16 mm

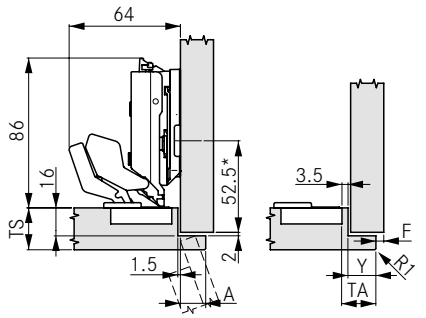

Mounting plate height 6
* Dimension for mounting plate for 37 mm hole spacing

Rack location	TS (max.)	A (max.)	Y (max.)	TA (max.)	F (min.)
	20	14.5	16	19.5	1
	26	14.5	16	19.5	See reveal table
	32	12.5	14	17.5	

LEGEND

A	**Overlay**
F	**Reveal**
TA	**Cup distance**
TS	**Door thickness**

TIOMOS M0

125° hinge (Door thicknesses of 6 to 10 mm)

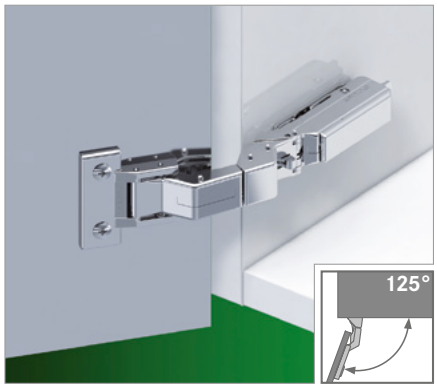

- For door thicknesses of 6 - 10 mm
- No cup hole necessary
- 3-dimensional adjustment
- For door overlays of up to 25 mm
- Compatible with all mounting plates in the Tiomos range
- Zero protrusion up to 14 mm overlay
- Opening angle 125°

Available in 3 versions:

- With integrated damper (3 adjustable damping levels)
- Without integrated damper
- Without self-closing mechanism (without spring)

ORDER INFORMATION

Door overlay	Cranking	Damper		without spring	Item No.		
		with	without		Click-on For screw fixing		
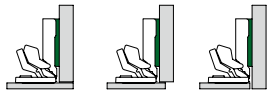	-	■	-	-	**F029**140**331**		
		-	■	-	**F047**140**332**		
		-	■	■	**F049**140**333**		

COVER CAPS

	Designation	Imprinted/Embossed	Item No.
	Hinge arm cover cap, steel, nickel-plated, not imprinted	On request	**F072**135**500**
	Hinge arm cover cap, right, steel, nickel-plated, GRASS imprint	GRASS logo	**F072**135**550**
	Hinge arm cover cap, left, steel, nickel-plated, GRASS imprint		**F072**135**551**
	Premium hinge arm cover cap with integrated clip protection, plastic, black, not imprinted	On request	**F072**140**504**

ACCESSORIES

	Designation	Item No.
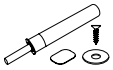	Tipmatic Pin for wooden and aluminium frame doors	**F069**135**396**
	90° opening angle reduction clip	**F072**135**871**

	Designation	Item No.
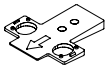	+5° wedge	**F072**135**757**
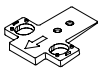	-5° wedge	**F072**135**758**

FASTENING OPTIONS

	Designation	Item No.
	Countersunk screw PH2, M5 x 6 mm For a minimum door thickness of 6 mm For aluminium, HPL, mineral composite	**F072**135**923**
	Euro cheesehead screw Ø 6.3 x 10.5 For a minimum door thickness of 10 mm, for chipboard, MDF	**F072**135**768**
	Countersunk screw M4 x 8 mm, sleeve M4 x 5.5 mm, internal hex key For a minimum door thickness of 8 mm, for chipboard, MDF, mineral composite, HPL	**F072**135**928**

		Material thickness		
		6 mm	8 mm	10 mm
Material	Aluminium	**F072**135**923**		
	HPL		**F072**135**928**	
	Mineral composite			
	Chipboard	-		**F072**135**768**
	MDF			

Packaging units are not covered in this brochure; please enquire with your supplier

INSTALLATION INFORMATION

All dimensions in millimetres

Overlay	Half overlay	Inset
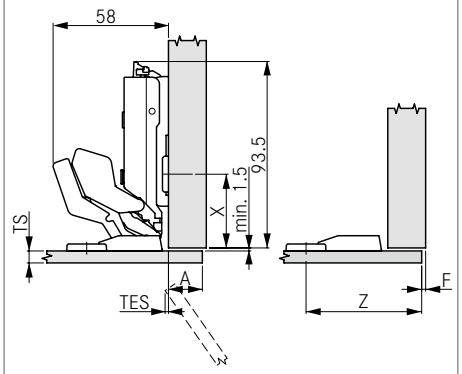	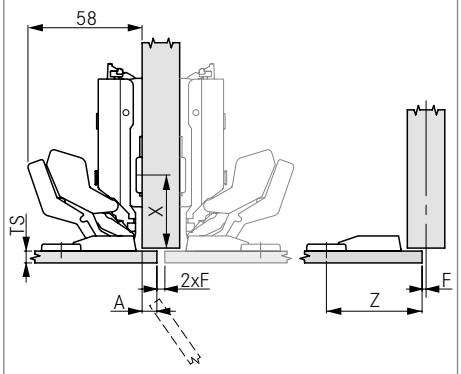	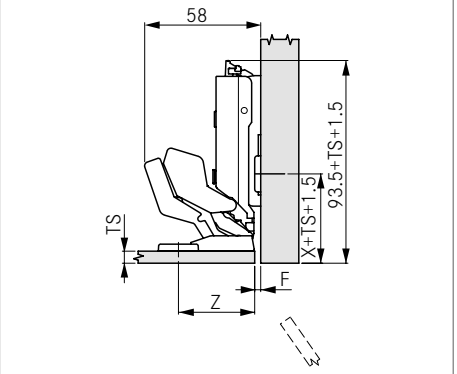
Mounting plate height 0	Mounting plate height 0	Mounting plate height 0

MINIMUM GAP/MINIMUM REVEAL

Values with a mounting plate height 0

Screwing dimension (Z)	38		39		47		49		51		53		55		56		58		60		61		63		64		66	
Door protrusion (TES)	0		0		0		0		0		0		0		0.5		1.5		3		3.4		0		0		0	
Door overlay (A)	-3		-2		6		8		10		12		14		15		17		19		20		22[1]		23[1]		25[1]	
Min. reveal (F)/gap (S)	F	S	F	S	F	S	F	S	F	S	F	S	F	S	F	S	F	S	F	S	F	S	F	S	F	S	F	S
Door thickness 6-10 (TS)	2	1.5	2	1.5	2	1.5	2	1.5	2	1.5	2	1.5	2	1.5	2	1.5	2	1.5	2	1.5	2	1.5	2	2.5	2	3	2	4

[1] Door thickness A = 22 - 25 only with opening angle reduction clip.

CROSS MOUNTING PLATE

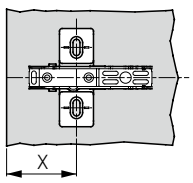

Hole spacing	Mounting plate height 0
28	37
37	46
	Mounting plate position (X)

LINEAR MOUNTING PLATE

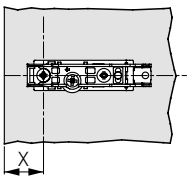

	Mounting plate height 0
X	29
	Mounting plate position (X)

SCREWING POSITION

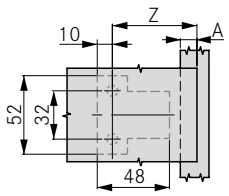

	Mounting plate height 0
Z	A+41
A	25 max.
	Screwing dimension (Z)

NUMBER OF HINGES

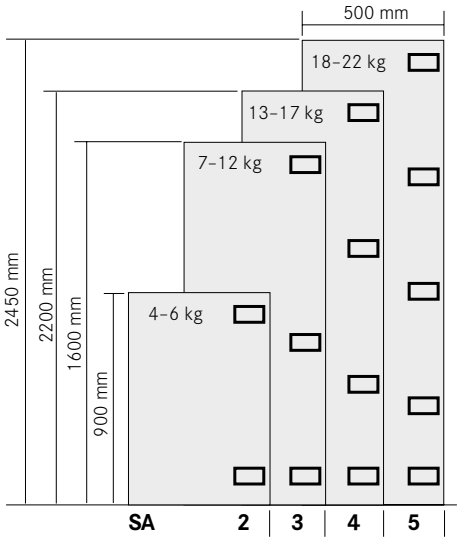

NOTES

An inset application is achieved with the mounting plate (X) and a low housing screwing distance (Z).

ⓘ **Installation advice** (except for aluminium)
Countersunk screw M5 x 6 mm:
1. Drill a Ø 4.8 mm hole
2. Cut a Ø 5 mm thread
3. Position the hinge and secure with the screws

ⓘ **Installation advice**
Countersunk screw M4 x 8 mm with sleeve M4 x 5.5 mm:
1. Drill a Ø 5 mm hole
2. Slightly countersink the edge of the hole
3. Insert the sleeve
4. Knock in the sleeve with a hammer
5. Position the hinge and secure with the screws

ⓘ **Installation advice**
Euro cheesehead screw Ø 6.3 x 10.5 mm:
1. Drill a Ø 5 mm hole
2. Position the hinge and secure with the screws

ⓘ **Installation advice:** Depending on the type and thickness of the base material the pull-out resistances can vary with the same fastening method. For information regarding the selection and processing of the base material please contact the base material supplier.

ⓘ **Liability claims:** Please note that GRASS cannot accept any liability for damage resulting from unsuitable fastening materials or methods.

F147100827001 – 10 | 2016 – EN – **GRASS promotion** – Subject to changes, setting and printing errors

G*GRASS®

GRASS GmbH
Movement Systems
Grass Platz 1
6973 Höchst, Austria
Phone: +43 (0) 5578 701-0
Fax: +43 (0) 5578 701-59
E-mail: info@grass.eu

Your contact:

www.grass.eu